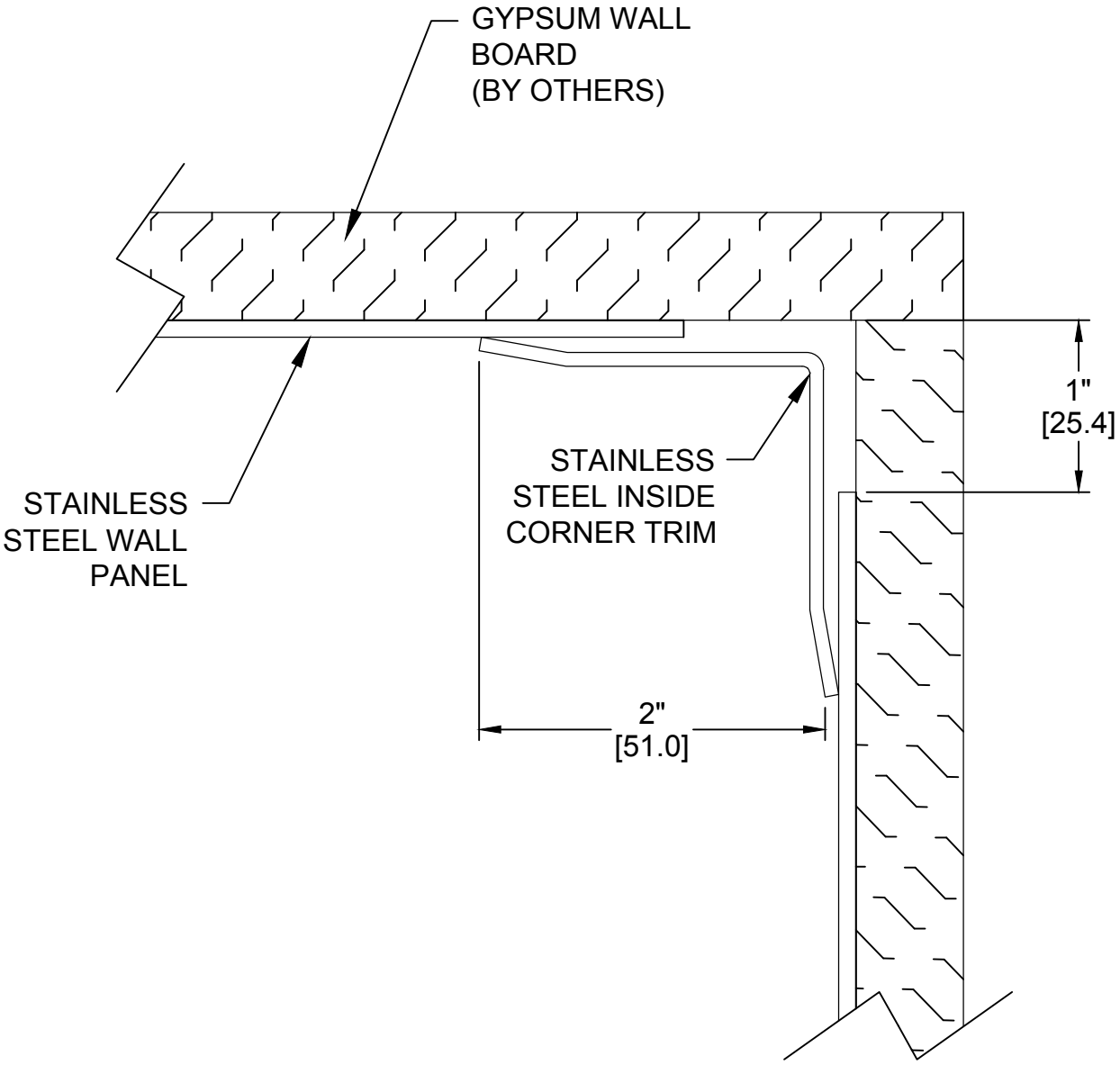

IPC™
DOOR + WALL PROTECTION SYSTEMS

DATE:	06/23/14
SCALE	1:1
DOC.CADIPC.216/rev1	

STAINLESS STEEL WALL
PANEL TRIM
(INSIDE CORNER)

inpro®

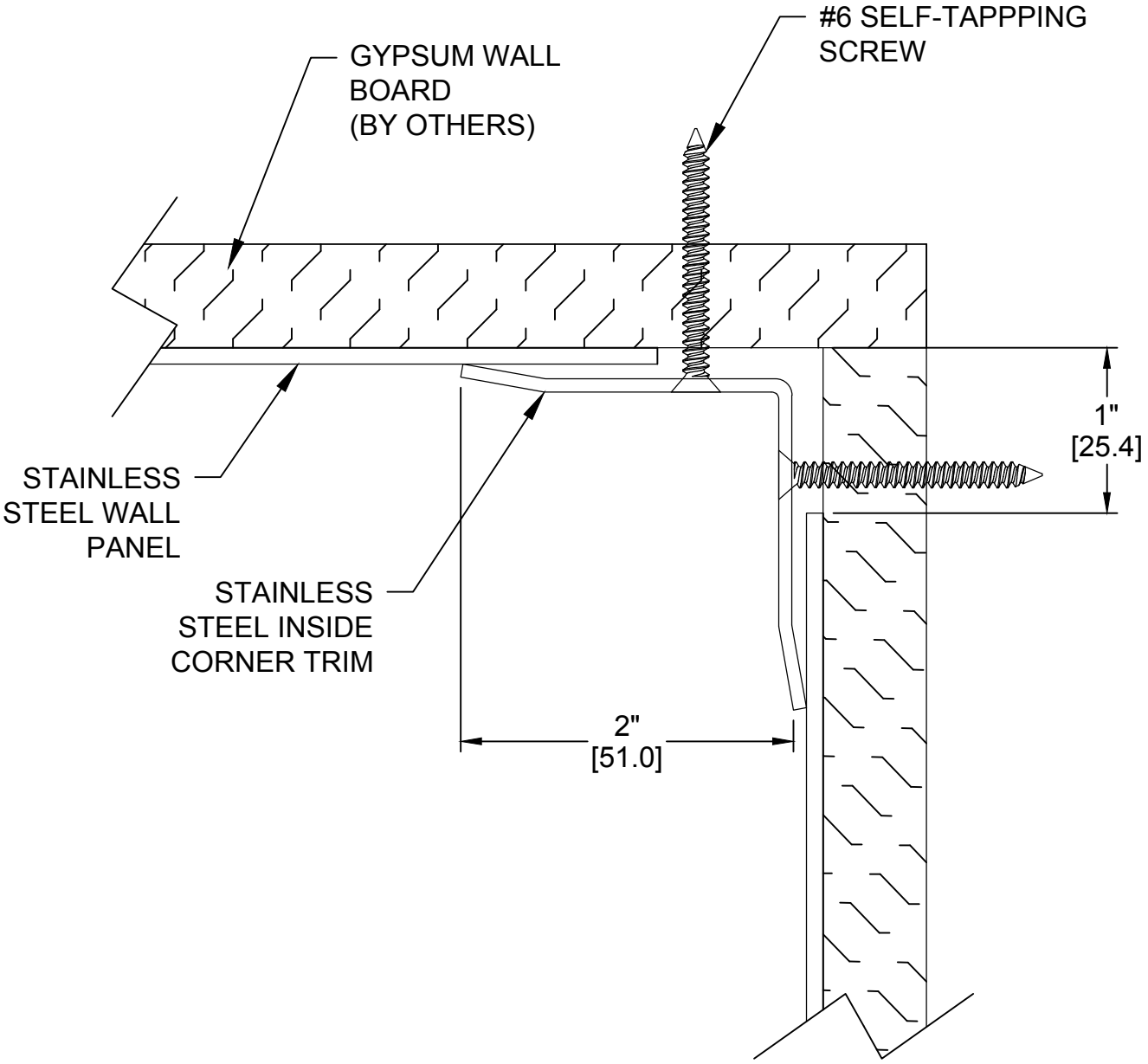

IPC™ DOOR + WALL PROTECTION SYSTEMS	DATE: 06/23/14	STAINLESS STEEL WALL PANEL TRIM (INSIDE CORNER W/ OPTIONAL COUNTERSUNK SCREW)	inpro®
	SCALE 1:1		
	DOC.CADIPC.216/rev1		

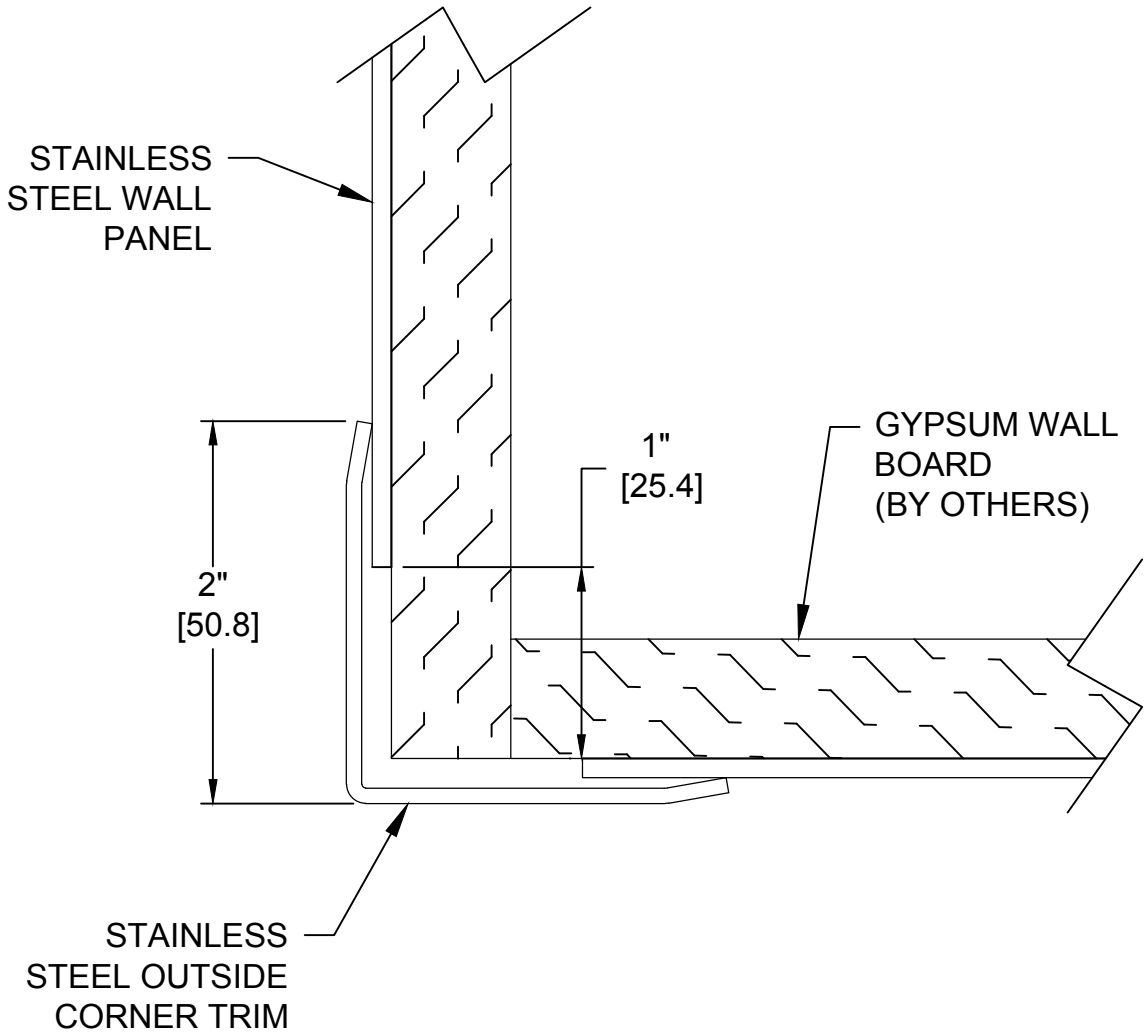

IPC™ DOOR + WALL PROTECTION SYSTEMS	DATE: 06/23/14	STAINLESS STEEL WALL PANEL TRIM (OUTSIDE CORNER)	inpro®
	SCALE 1:1		
	DOC.CADIPC.216/rev1		

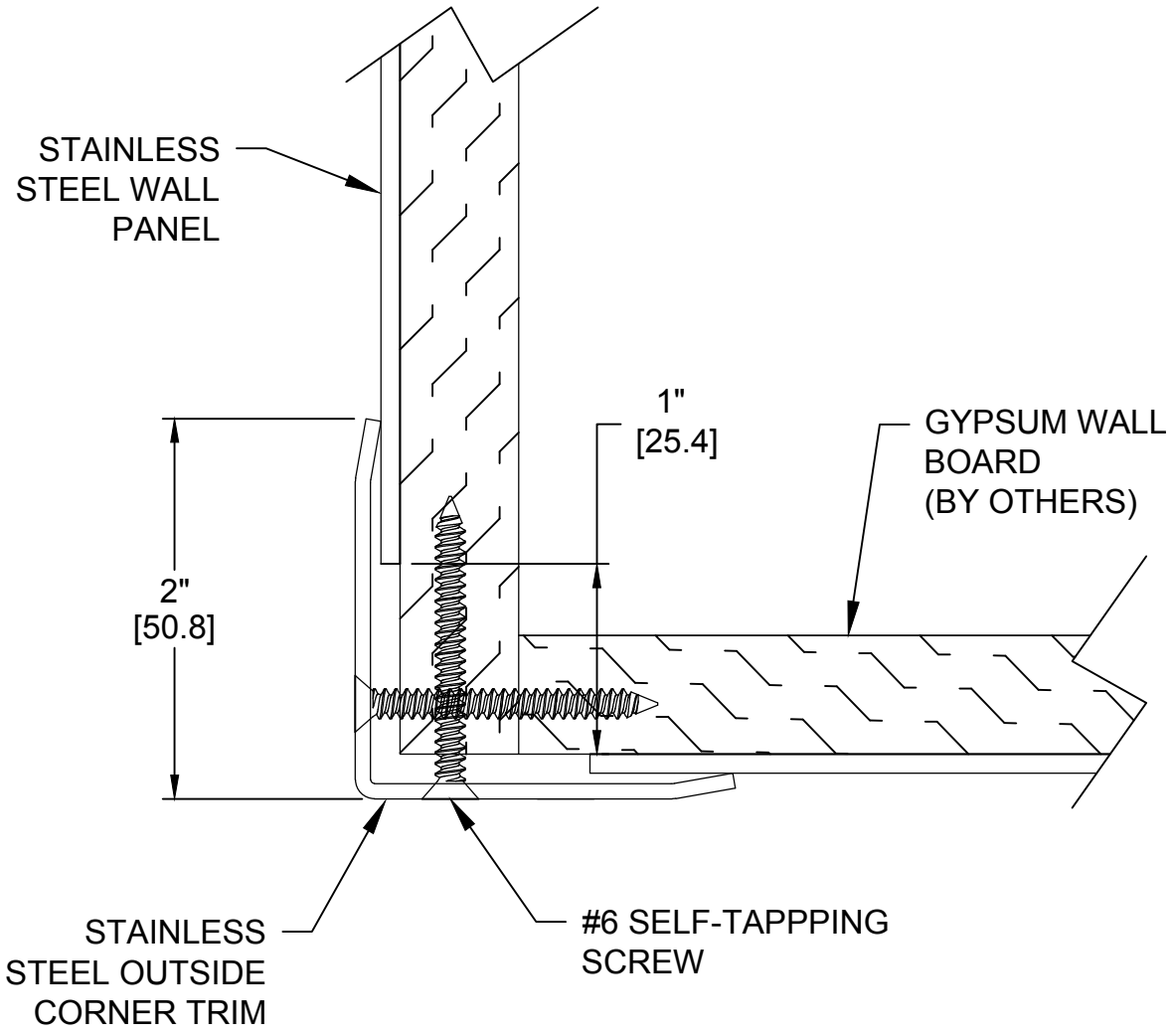

IPC™ DOOR + WALL PROTECTION SYSTEMS	DATE: 06/23/14	STAINLESS STEEL WALL PANEL TRIM (OUTSIDE CORNER W/ OPTIONAL COUNTERSUNK SCREW)	inpro®
	SCALE 1:1		
	DOC.CADIPC.216/rev1		